NUMBER FIVE NOTES FROM THE SHOP

Woodsmith™

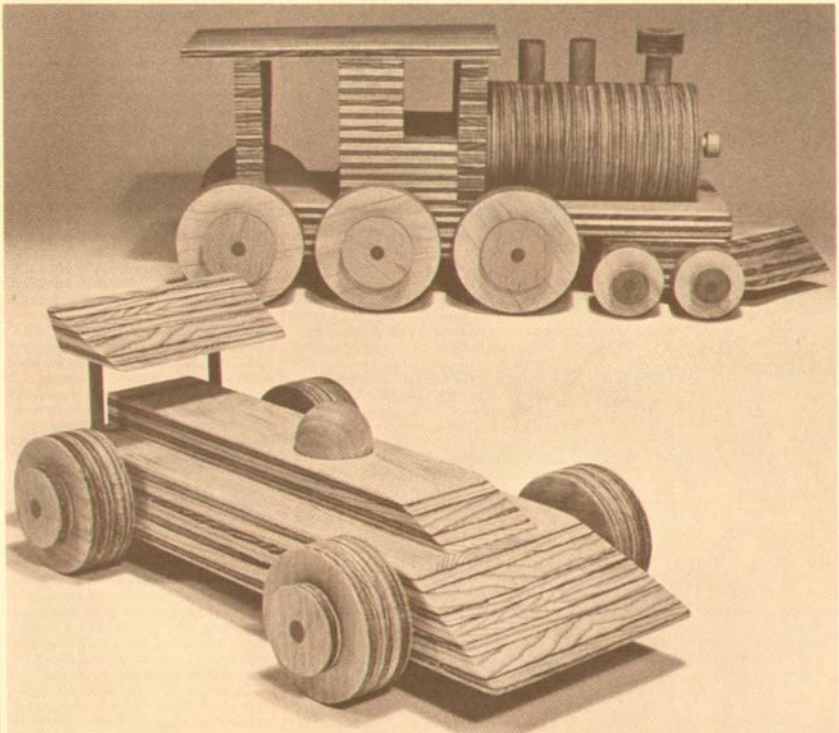

BEAUTIFUL TOYS MADE FROM SCRAP PLYWOOD

MAKE YOUR OWN BOW SAW, TAPER JIG, WEDGE CLAMPS

SPECIAL: TURN YOUR ROUTER INTO A SHAPER

Woodsmith

Number Five **September, 1979**

Editor
Donald B. Peschke
Graphic Design Consultants
David C. Webster
Jon Snyder
Contributing Editor
Adolph E. Peschke
Subscription Manager
Linda Hill

WOODSMITH (ISSN 0164-4114) is published bimonthly (January, March, May, July, September, November) by Woodsmith Publishing Co., 2200 Grand Ave., Des Moines, Iowa 50312.

WOODSMITH is a registered trademark of the Woodsmith Publishing Co.
©**Copyright 1979** by Woodsmith Publishing Co. All Rights Reserved.

Talking Shop

ABOUT THIS ISSUE

If I had to choose one project in this issue that I'm most excited about, it would have to be the router table on pages 6-7.If you have a router (at least a 7/8 Hp), I would urge you to go ahead and build this table. It cost me about $13 to build, and I can't think of a better investment.

A large portion of the letters I've received have requested projects using a router. I was having a tough time coming up with ideas . . . until I decided to build the table and mount the router. Now it's a whole new world.

I mentioned in the article that this table will turn your router into a shaper. In reality, it's more than a shaper.

You're limited to working on the edge of a board with a shaper. But with the router mounted on a table you can make cuts down the center of the board as well as on the edge. This gives you a real advantage for cutting dadoes and grooves for shelves or drawers.

If nothing else, this table is worth building only to cut rabbets. Cutting a rabbet on a table saw requires two passes, or you can use a dado or molding head. But both ways are kind of a hassle. With the router table, it's just one pass with a rabbet bit (or a straight bit and the fence).

So what's the big deal about cutting rabbets? Well, it means that if you're making drawers, for example, you can make all the straight cuts on your table saw, and then switch to the router table for the rabbets and dadoes . . . without wasting time changing blades on the table saw.

Another nice thing about the router table is that now you can work with narrow or short pieces of wood. A router is designed to be hand-held, which presents problems with small pieces of wood. You have to secure the wood so it won't move — usually with clamps that get in the way — and then move the router along the wood. But with the router mounted on a table, the router is secure, which means you move the wood to it . . . a much more versatile operation.

The 1x2 shown on the router table is a good example. I cut a rabbet on one edge, a groove down the center, and a molding cut on the other edge. All of that on a piece of wood only 1½" wide. Beautiful.

I could go on and on about the possibilities for this router table. It's not often you get a whole new tool to work with. While I was building it, my mind was racing with all the possibilities.

By altering the fence design a little the router table will become an edge jointer. You can also cut grooves for splines a lot more accurately. Multiple cuts with different bits will also be easier.

I guess that I'm talking about this router table so much because I want to work with it some more. There are a lot of possibilities, and I want to include them in future issues.

I'm also giving serious thought to buying a commercial duty router to mount on this table (probably a *Rockwell* or *Stanley* with a ½" collet). I've resisted this temptation before because I prefer to use only those tools that most of you have. But I'm beginning to think that a better router will be worth the investment.

Two more things, and then I promise I'll stop. Please, go ahead and do the wiring as shown in the photo of the router table. If you're not comfortable with wiring, maybe you can talk a friend into doing it. Having that switch at your knee is a very helpful safety feature. Too many things can happen with something that's spinning at 20,000 to 30,000 RPM.

And finally, go ahead and buy some ear protectors (if you don't already have them). The kind I bought are made for hunters and shooters, and they really help. I probably look like something from outer space with the ear protectors, goggles, and a dust mask on. But then, I've had comments that all of that stuff actually improves my appearance. (You can't win.)

SMALL BUT GROWING

Woodsmith is not what you would call a major publishing venture. In fact, there are only about 600 subscribers, which is only a handful compared to most magazines.

My point is this. If you know other woodworkers who you think would be interested in *Woodsmith*, let them know about it. I don't have a lot of money for advertising, and can send out only a limited number of direct mail pieces (junk mail) each year. So it's difficult for people to find out about *Woodsmith*.

I figure the best way to let someone know about *Woodsmith* is to send them a sample copy. Free. If you know someone who would be interested, send us his or her name and we'll get a sample copy to them. We'll include a subscription form for convenience. But, there is absolutely no obligation to subscribe. And we won't bother them with a lot of additional requests. (We can't afford it anyway.)

NEXT MAILING: November 1, 1979.

Wedge Clamps

AN INEXPENSIVE WAY TO GET IT TOGETHER

There's nothing new about using wedges to clamp boards together, carpenters have been using them for hundreds of years. The clamps shown here are very basic: each clamp is a 2x4 "bar" with stops at each end. I've made one departure from tradition by inserting plastic splines (1/8" thick polystyrene plastic sheet) to raise the workpiece and prevent it from being glued to the bar.

For two clamps you need an 8-foot 2x4. Follow the cutting sequence shown in Fig. 1. Cut off a 48" length, rip two kerfs for the plastic splines, and then cut off 4" lengths for the stops.

The fixed stop is fastened to the bar with ½" plywood gussets. When drilling the pilot holes for the screws, make sure they fit snugly into the corners — only a ½" from each edge.

For the adjustable stop, first glue and screw the gussets to the 2x4 block. The block is held to the bar with two ½" dowel pins. It's essential that the holes for the pins are drilled so the block has no chance to pivot back. (Even a small pivot creates a bow in the boards being glued.)

Clamp the stop block near the end of the bar, then drill a ½" hole through the plywood gusset and into the bar. (This hole should be no more than 3/4" from the front edge of the gusset.) Mark a line on the front edge of the gusset and measure off 1½" intervals (Fig. 4). Slide the block up to the next line, clamp it, and drill another ½" hole using the hole in the gusset as a guide.

For the other side, put a ½" dowel in the first set of holes to hold the stop in place. Then drill holes, removing the pin and sliding the stop each time. When the stops are in place, it's best to run them through the saw cutting a clean, flat face on each stop.

Since the ½" dowel pins have a habit of wandering off and hiding just when you need them, fasten them to the block with a length of string and staples.

The wedges shown here are made of 5/4" oak. Hardwood works best, but pine or fir will work for a while (Fig. 3).

To use the wedge clamps, make a dry run first. Place the boards on the bar, slide the adjustable block into position, and hammer the wedges tight using two hammers. If all the boards fit tight with no gaps, you're ready to glue. If there's too much space for the wedges to tighten properly, put a small block of wood between the boards and the fixed stop to take up some of the slack.

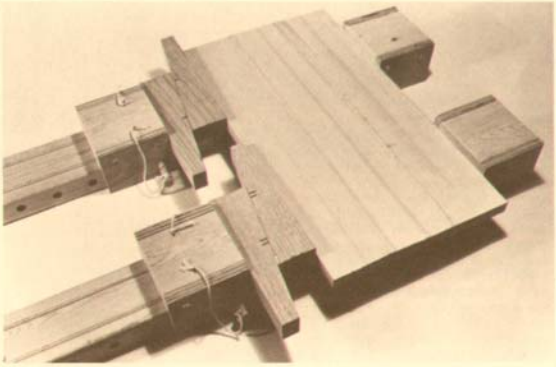

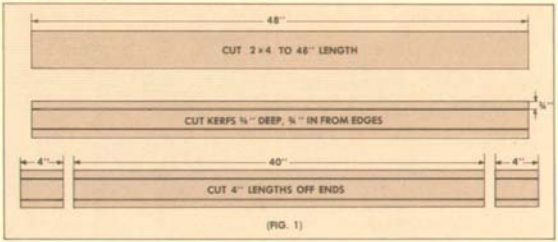

(FIG. 1)

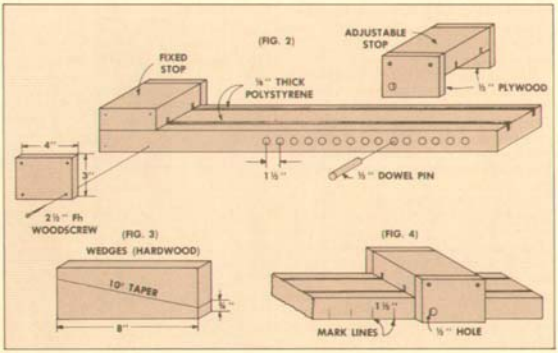

Taper Jig

HOW TO GET A NEW ANGLE ON WOODWORKING

The type of taper jig shown here is particularly helpful for cutting long tapers on chair or table legs. As shown in the top drawing, the workpiece is nestled in a notch in the crosspiece and the jig is pushed straight along the rip fence. You can cut a taper along the entire length, or end it anywhere you want.

The jig is quite easy to make. It requires only two pieces: the base, which is a piece of *straight* hardwood; and the crosspiece which is a piece of ¼" plywood. Most jigs like this are made with the crosspiece nailed or screwed to the base. However, it's much more versatile if the crosspiece is adjustable. In this design the crosspiece slides in a dado and is held in position with a bolt and wing nut.

Cut the dado in the base by making repeat cuts on your table or radial arm saw. The dado must begin *exactly* 14" from the end of the base. After cutting the dado, flip the base over and drill a ½" counterbore hole deep enough to accept the head of a ¼" machine bolt. Then drill through with a ¼" bit.

The crosspiece is cut from a piece of ¼" plywood. It should fit snugly into the dado: loose enough to slide easily, but tight enough so it won't jiggle around. Cut a ¼" x ¼" notch in the end of the crosspiece and make the slot by drilling a series of 9/32" holes down the center (they start and end ½" from each end). Clean out the slot with a coping saw and file.

The length of the crosspiece can vary according to the range of tapers you want the jig to cut. The best thing, of course, is to make all three crosspieces illustrated in the drawing below. The one I use most of the time is the 5" one, which will cut tapers from 5° to 15°.

The dimensions of the base and crosspiece are determined by trigonometry. The angle of the taper (angle A) is a function of (a) the distance between the crosspiece and the end of the base, and (b) the distance the crosspiece extends from the base. (Tangent of A equals a/b, for you math nuts.)

By using a little trigomonetry you can make life easier. If (b) is exactly 14¼" (14" between the crosspiece and the end of the base plus ¼" for the notch), then each time you move the crosspiece out ¼" you change Angle A by 1°. Thus, if you want an 8° taper, just pull the crosspiece out eight ¼", or 2". The tables below each crosspiece show how far to move it to get the desired angle.

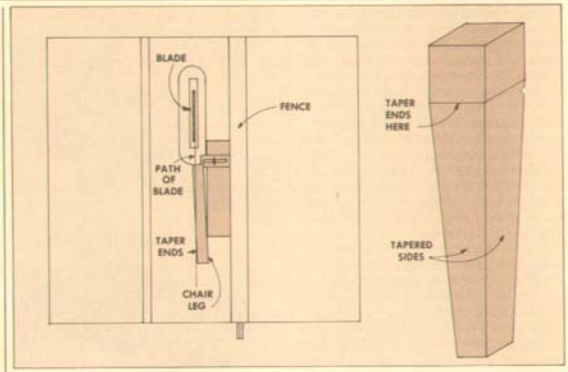

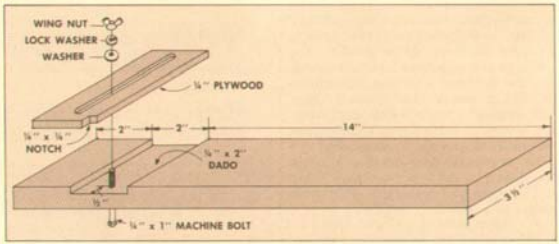

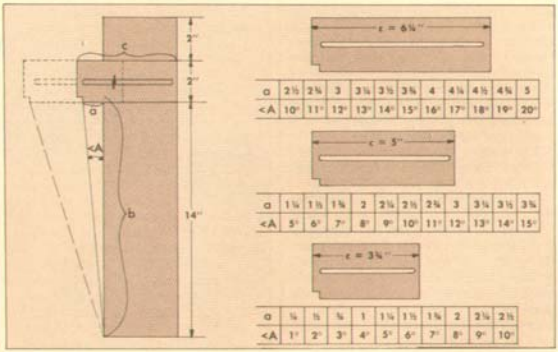

a	2½	2¾	3	3¼	3½	3¾	4	4¼	4½	4¾	5
<A	10°	11°	12°	13°	14°	15°	16°	17°	18°	19°	20°

a	1¼	1½	1¾	2	2¼	2½	2¾	3	3¼	3½	3¾
<A	5°	6°	7°	8°	9°	10°	11°	12°	13°	14°	15°

a	¼	½	¾	1	1¼	1½	1¾	2	2¼	2½
<A	1°	2°	3°	4°	5°	6°	7°	8°	9°	10°

Bow Saw

A FOLD-UP, TAKE-ALONG VERSION

This is a take-apart, fold-up, carry-along version of a bow saw. The nice part about it is that the handles fold around to protect the blade.

The original of this bow saw is made of oak, and the two shown in the photo are made of walnut and maple. All you need is a piece of hardwood 3/4" x 3" - 22".

Lay out the cuts as shown in the Cutting Diagram. Cut the handles to length, but leave them at the full 1½" width along the entire length for now.

The next step is to drill the three holes as shown in the Drilling Diagram. The 3/8" hole is centered on the width of the outside edge of the handle, 6" from the bottom. The top hole for the threaded rod is the only hassle. It must be drilled at a 7° angle as shown in Fig. 1. Pivot the handle at 7° by placing a 3/4" thick block 6" from the top end of the handle. Then drill straight down.

After drilling the holes, rip a 1"-deep kerf along the length of the outside edge of the handle (Fig. 2). The kerf is then extended 1" from the bottom (Fig. 3). (I did this by hand with a back saw, though it can be done on a table saw if you use a tenon jig.)

The final step on the handles is to cut them to shape. This is easiest on a band saw, but can be done with a sabre saw by clamping the handle to the end of your workbench and cutting a little at a time.

For the stretcher, bore a 3/8" hole in each end. Fig. 4 illustrates a simple boring jig. Drill a 3/8" hole ½" up from the bottom edge of a piece of scrap. Clamp this block to the end of another board, then position the stretcher so it's centered on the hole. Hold it in place by nailing a strip of wood on each side of the stretcher. Then drill, using the hole in the block as a guide.

After drilling the 3/8" hole in the stretcher, cut the ends off at 7° and glue a 3/8" dowel in the hole. To prevent the bow saw from "racking" make sure the ends of the stretcher have firm contact with the handles.

Finally, cut a small notch on the top outside edge of the handle (1" long, ¼" deep) to allow room for the washer and wing nut. The original of this bow saw used an 18" stove bolt. But they're exceedingly rare these days. So ¼" threaded rod will have to do.

The blade is a 21" trim saw blade, available from *Sears*. It's attached to the handles with 3/16" machine screws.

Design: Adolph E. Peschke

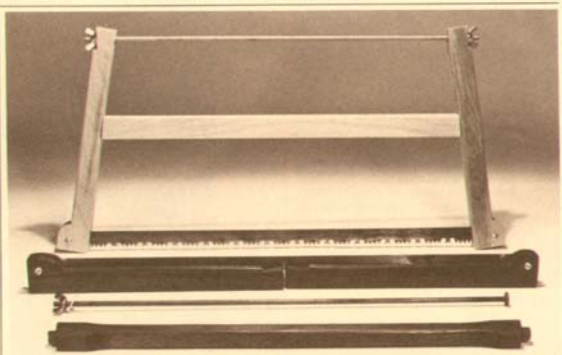

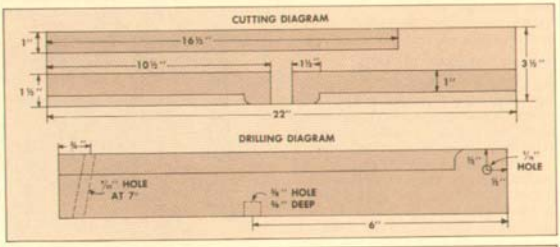

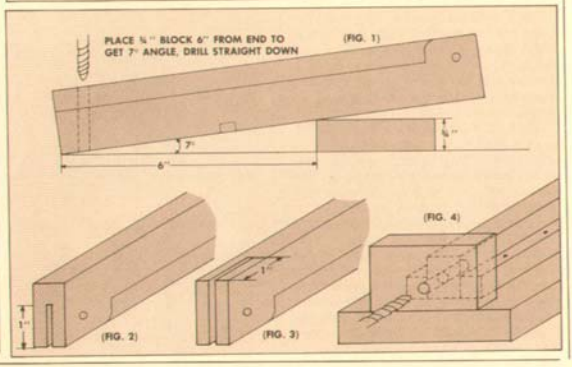

Router Table

TURN YOUR ROUTER INTO A SHAPER

This router table is undoubtly the most beautiful project I've worked on. Mighty tall words, you say, for something that ugly. Let me explain. You know the old phrase, "Beauty is as beauty does"? Well, that goes ten-fold for this router table.

A router *should* do a lot of things. But it is somewhat of a problem to hold and guide with any accuracy because only half of its base is on the workpiece during edge molding operations. And you can forget using it on narrow or short pieces of wood. Consequently, the router spends most of its life trimming plastic laminate.

Not any more. By mounting the router on a table like this, all of a sudden it's a whole new tool. In effect, you have a shaper for a fraction of the cost. Now you see why I think it's so beautiful. With this router table you can make molding cuts along the edge of a narrow board, cut dadoes and rabbets, and make multiple cuts with ease.

Okay, stop selling and let's get on with how it's built.

CUTTING THE LEGS

Rip a 2x4 to get the four legs, making sure each leg is 1½" square. The Materials List lists the length of the legs as 35". But don't follow that. This is your table, and as such, it should be built to fit you. To determine the height that's best for you, stand upright and hold your hands out as if you were guiding a piece of wood on the table. Your back should be comfortably straight and all of the "spring" should be in your arms.

Okay, hold that position and with your third hand measure the distance to the floor. That's the length of the legs you want. (You don't have to allow for the thickness of the top, that will be lost because the legs are angled, so it all comes out even.)

Mark all four sides of the legs with 1, 2, 3, or 4 hash marks, turning the leg 90° each time. With a taper jig cut a 7° taper at the top of Sides 1 and 2 (Fig. 1). This taper starts 3/8" in from the edge, and provides 3½" of tapered surface.

Cut the top and bottom of the leg with the miter guage set for 7° and the blade tilted at 7°. Cut this miter/bevel on the top so the corner between Sides 1 and 2 hits the blade first. Make the same cut on the bottom of the leg except the corner where Sides 3 and 4 meet will enter the blade first. Finally, chamfer the corner between Sides 1 and 2 with a file.

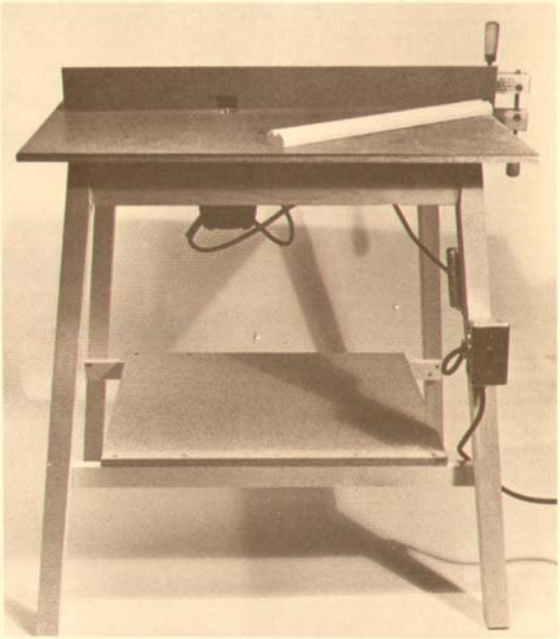

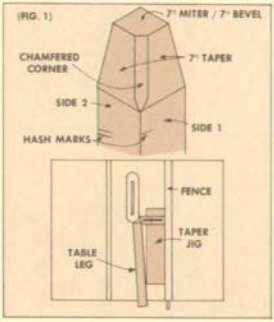

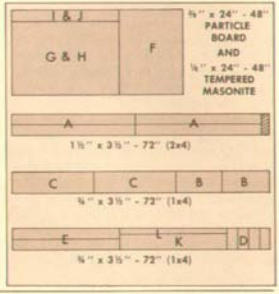

ASSEMBLING THE STAND

Cut the end rails (B) and the front and back rails (C) to length. The four corner braces (D) are cut as follows. Set the blade at 45° and cut a bevel at the end of a piece of 1x4 with the miter gauge in the left channel. Then flip the board top side down and switch the miter gauge to the right channel and cut another 45° bevel so the blade enters 3" from the end. (This will leave a 1½" flat surface on the "top".) Repeat this procedure (flipping and measuring 3") until you have four corner braces.

Predrill pilot holes in the corner braces. These holes should be no more than ½" from the top and bottom (for greatest leverage) and start 1" in from the edges. Glue and screw the corner braces to the rails, so the outside of the rails lines up with the outside of the legs. This is most easily done up-side-down (the wood, not you).

With the four corner braces in place, drill a 3/16" hole in the center of the brace for a 3/16" x 3" hanger bolt. I've found the easiest way to deal with hanger bolts is to put two hex nuts on the threaded end, tightening them together with two wrenches. Then use a socket wrench to screw the hanger bolt in place.

Cut the 1x2 shelf supports (E) and fasten them to the legs so the top of the 1x2 is 10" off the floor. (There will be a gap at the bottom of the 1x2 because of the angle of the legs.) Fasten the shelf (F) to the 1x2s with glue and screws.

ADDING THE TOP

Now you should have something that looks like Fig. 3. The next step is to add the particle board top and the tempered *Masonite*. Place the top (G) on the stand so there's 2½" overhang at the sides and front, and 3" at the back.

Draw the outline of the rails on the bottom side of the top (G). Flip it over and reposition it exactly the same. Now you can use the outline as a guide for drilling pilot holes to screw the top to the rails.

Once the particle board is in place apply contact cement to it and the *Masonite* and join these two together.

ATTACHING THE ROUTER

Now you're ready to attach the router. First drill a 1½" hole where the router bit will come through. I centered this hole 12" from the left edge and 9" from the back. This affords the most area for supporting the workpiece.

Remove the plastic sub-base from your router, and use it as a template to mark the position of the holes in the table top. Before marking the holes, make sure the router, when fastened in place, will be in a position that's easy to change bits and adjust the height. The machine screws that hold the sub-base to the router will have to be replaced with longer ones to account for the thickness of the top.

Drill 3/8" countersink holes just deep enough to sink the head of the machine screws below the surface. Then drill through the particle board with the proper size bit, and attach the router.

ADDING THE FENCE

Many operations can be performed on the router table as it is now. That is, with any bit that's guided with a pilot. But you'll probably want to add a fence for other operations.

Refer to Figs. 4 and 5 for the construction of the fence. Rip a 1"-wide strip from a good, straight 1x4 for the fence support (L); the 2½"-wide piece that remains is the fence platform (K).

Cut a 2" wide, 1½" deep notch in (K), centered 12" from the left end. Then cut (L) into two pieces: 11" long and 16½"

Continued on next page

(FIG. 2)

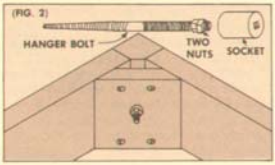

MATERIALS LIST

A	Legs	1½ x 1½ - 35
B	End Rails	¾ x 3½ - 13
C	Front & Back Rails	¾ x 3½ - 23
D	Corner Braces	¾ x 3½ - 3
E	Stretcher	¾ x 1½ - 30½
F	Shelf	¾ x 17½ - 24
G	Top	¾ x 21 - 30½
H	Top Facing	¼ x 21 - 30½
I	Fence Front	¾ x 3 - 30½
J	Fence Facing	¼ x 3 - 30½
K	Fence Platform	¾ x 2½ - 29½
L	Fence Support	¾ x 1 - 29½

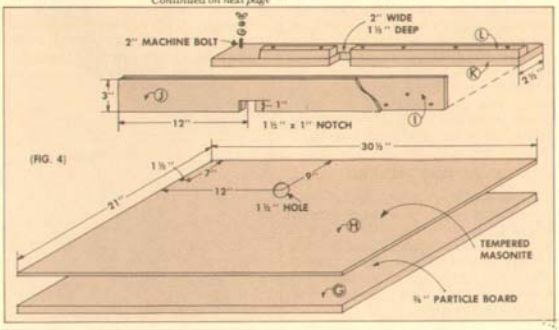

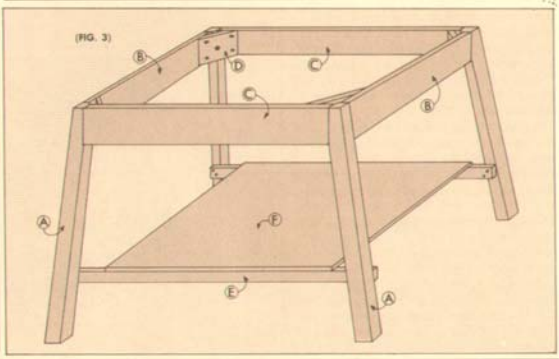

long, and screw and glue these pieces along the front edge of (K).

Temporarily clamp the fence front (I) to the *Masonite* facing (J) and cut a 1½" x 1" notch in both pieces, centered 12" from the left end. Then screw the fence front (I) to the fence platform (K and L). Finally, apply contact cement to the particle board fence (I) and the *Masonite* facing (J) and join them.

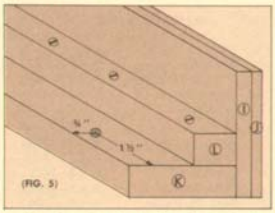

(FIG. 5)

The fence is attached to the table by drilling a ¼" hole through the fence and the table top at the left end (Fig. 4). Then use a ¼" machine bolt and wing nut to hold the left end of the fence in place. The right end pivots to where you want it and is then clamped in position. (As the fence swings away from the router bit, it may appear as though you'll be cutting at an angle. You're not, it will cut a straight line.)

SOME FINAL THOUGHTS

The router table is ready to use as is. But I would urge you to go ahead and do the wiring as shown in the photo. This is simply a matter of wiring an outlet box to a switch and installing a plug on the end of the wire coming from the switch. The wiring only takes a few minutes and is well worth the effort.

I mounted the switch up-side-down, that is, up is off. The switch lever is positioned at my right knee. This way if I get into any trouble all I have to do is lift my knee to turn off the router. Check the *Reader's Digest Complete Do-It-Yourself Manual* (the yellow book) for wiring information.

Another thing I would consider a must is a set of ear protectors. Believe me, they help. Not only do they protect your hearing, but because the router is so loud it makes you a little tense and more likely to rush your work and make a mistake. The ear protectors I bought (at a sporting goods store) cost only $7.00, and they're well worth the investment.

Finally, the direction of feed on this table is from right to left. Thus, the workpiece should be between you and the bit. You can feed from left to right, but then the bit has to be between you and the workpiece.

Ellipse

TWO WAYS TO GET AROUND

An ellipse can be drawn in one of two ways, shown in Figs. 1 and 2. In general, the shape or look of an ellipse is best when the width (minor axis) is about 2/3s of the length (major axis).

FIRST METHOD

Fig. 1 shows an ellipse drawn to a stated number of degrees. In this case it's 45°, producing approximately the 2/3s ratio for the length and width. There are two variables: the *length* of the ellipse (the major axis), and the *angle* (stated in degrees).

1. Decide the length you want (Fig. 1 shows 10" for example) and mark this measurement as line A-B.
2. Draw Line C-D so it bisects Line A-B at 90°.
3. Place a protractor on Line C-D so it's at the angle you want. (Fig. 1 shows it at 45°)
4. The distance between focal Point F1 and Point C is half of A-B (half of 10", or 5", in this example). Slide the ruler and protractor up and down to locate Point F1 and Point C (5" apart). Do the same thing on other side for Point F2.
5. Drive a small brad or thumbtack at both focal Points F1 and F2.
6. Loop a string around Points F1 and F2 and tie a knot so the string reaches Point C. Use a pencil to draw the ellipse.

SECOND METHOD

The second method (Fig. 2) is helpful when you want to frame something, such as a photograph.

1. Measure off both the length (A-B) and the width (C-D) of the ellipse.
2. To locate the focal Points F1 and F2, use a ruler to mark off half the length of A-B. (Pivot the ruler on Point C until the 5" mark is directly on Line A-B.
3. Draw the ellipse with string and pencil.

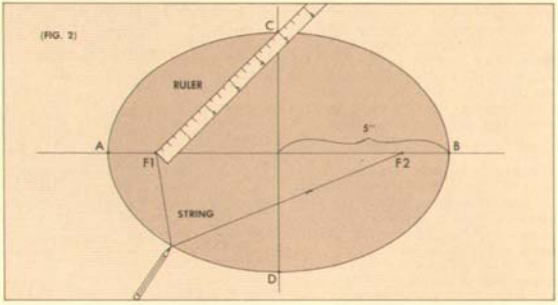

(FIG. 2)

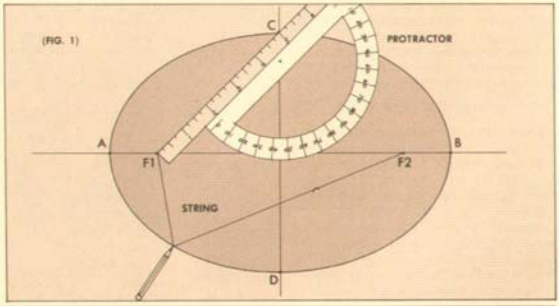

(FIG. 1)

Oval Frame

A BEAUTIFUL WAY TO FRAME A PICTURE

There's nothing too difficult about making an oval frame. You simply cut out the oval, round off the inside and outside edges, and cut a rabbet in back to mount your favorite picture. All you need is a sabre saw and a router.

Wait a minute. Round off the inside and outside corners? With a router? That's almost impossible.

Okay, you can't do it with a router *if it's hand-held.* But you can do it, (and very easily) if the router is mounted on a table (like the one shown on pages 6-7). *Sears* also sells a router table for about $50.00, and there are others available.

The frame shown here is designed for an 8x10 photograph. (An 8x10, like everything else, is not actually 8x10, it's 7½ x 9½, because of the ¼".)

Follow the instructions on the previous page to draw an ellipse. (I used the angle/protractor method at 45°, but the ruler method is probably better in this case.)

The outside line is an ellipse with a 10½" major axis. But the inside is *not* another true ellipse. Instead you use a compass set at 3/4" and run the pointed end around the outside line so the pencil end scribes the inside line, exactly parallel.

To make the inside cut, drill a hole near the inside line and cut it out with a sabre saw. Draw another ellipse on the waste and cut it out for a plaque.

Before making any of the molding cuts on the edges, make sure the oval is smooth. This will require quite a bit of careful filing and sanding. Even the slightest hollow or bump along the edge will be magnified when you make the molding cuts. The tips of your fingers are a better gauge of smoothness than your eyesight. Run your fingers along the edge and keep filing and sanding until it feels perfectly smooth.

The outside edge is cut with a ½" radius corner-round bit with a 5/16" pilot. The inside edge is cut with the corner-round bit and a 7/16" pilot. When making these cuts on the router table, the frame is rotated counter-clockwise (from right to left). Always keep the frame between you and the bit.

I cut a piece of 1/8" sheet plastic (polystyrene) to protect the photograph. The rabbet is deep enough to accommodate the plastic, the photo, and a thin piece of poster board on the back of the photo. All of this is held in place with a few ½" brads.

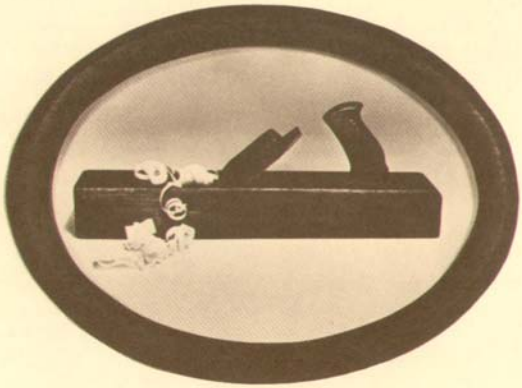

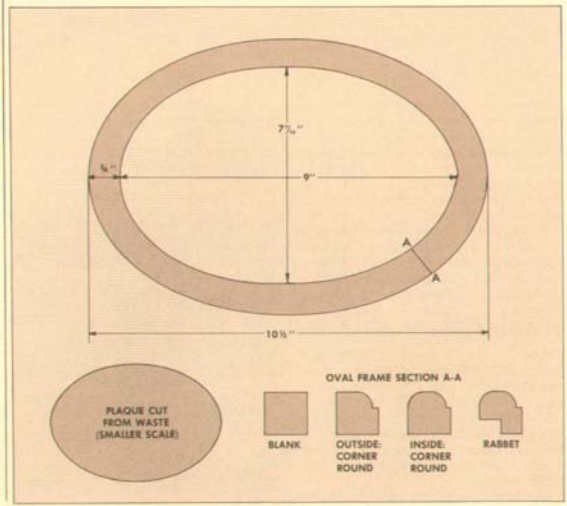

Toy Train

IF ONLY IT WOULD RUN ON TIME . . .

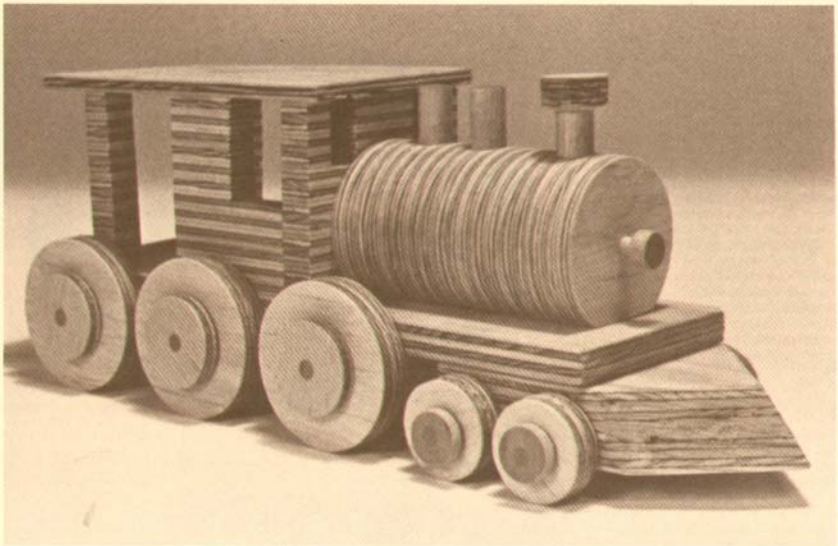

The design for this train started with the wheels. I was trying to find a way (a cheap way) to make wheels for toys. After experimenting on a piece of scrap plywood, I discovered that the layers of plys looked like tread on a tire. That discovery was simply carried to an extreme for this train.

All you need to make the train is some ½" and ¼" plywood and dowels. Cut the plywood into strips 3½" wide and 24" long. For best appearance, the grain on the top ply should run the length of the strip.

THE CHASSIS, CAB AND COW CATCHER

Cut off 15" and 12" pieces (A and B) and glue them together to form the chassis and the cow catcher. (When the glue is dry, trim this assembly to 3¼" wide.)

The cow catcher is cut off the end of the two pieces (A and B) that are glued together. The cutting procedure is shown in Fig. 1. Set the blade at 30° and the miter gauge at 45°.

It's the best to kind of sneak up on this cut because the blade actually enters at the top first and it's hard to judge so the bottom of the cut is at the center.

For the second cut draw a line across the bottom and the other side so you can tell where the blade should enter. Cut the cow catcher off 4½" long. Then trim the chassis so it's 10" long.

Drill the ¼" holes for the axles, and the ½" holes for the pivot dowel in the chassis and the cow catcher, as shown in Fig. 2.

CUTTING DIAGRAM

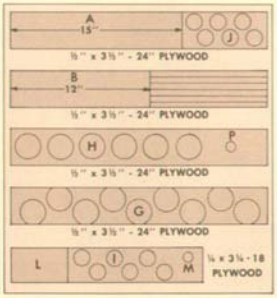

THE WHEELS AND BOILER

To make the cab, first cut six ½"-wide strips, 11" long. Glue and clamp these strips together. (This is longer than you need, but the 11" length is easier to handle.) When the glue is dry cut off pieces for the cab's sides (E), cab front (F), and the door frames (D). Use a coping saw to cut out the windows (Fig. 1). All of the circular pieces are cut with a hole saw. The one I used was a *Great Neck* 7-in-1, but a lot of companies make them (*Sears, Arco,* etc.). Hole saw blades are sized according to their outside diameter. However, the part you want is the inside diameter. To make things easier all dimensions given here are the outside blade diameter, and *not* the inside (actual) diameter.

One last thing about hole saws. If you drill all the way through the plywood, the circular piece you want will be trapped in the blade. So, stop 1/16" short of going all the way through. Then flip the plywood strip over and finish the cut. This way you'll have a portion to grasp and twist free from the blade.

The six back wheels are cut with a 2½" hole saw. After they're cut, drill out the center hole to 9/32". (This permits the wheel to ride freely around the ¼" axle dowel.) The same procedure is followed for the 1½" front wheels.

The 1½" back wheel hubs are cut from ¼" plywood with a ¼" center hole. For the front wheel hubs, drill a ¼" hole in the center of a ½" dowel first, then cut off ¼"-thick slices.

The axles are ¼" dowels, 1½" long. Glue the axles into the hubs and, when dry, sand the dowel flush with the hub.

The train's boiler consists of nine circles with flat bottoms. Cut these pieces so the bit enters 1" from the edge, automatically creating a flat bottom. Choose one piece with a nice face grain for the front, and slide it on a ¼" dowel. Apply glue, and add the next one, etc. Clamp all of them tight with C-clamps. Cut the dowel flush at the back, while leaving a ½" sticking out the front for the lamp. Finally, drill the ½" holes for the smoke stacks with a Forstner or *Stanley Power Bore* bit.

For the top of the front smoke stack drill a ½" hole in the plywood first, then use a 1" hole saw to cut it out.

ASSEMBLY

The first step in assembly is to glue the cab sides (E), cab front (F), the door frames (D), and the roof (L) to the chassis. This is most easily done with a *Jorgensen* hand screw and four or five hands.

Next add the boiler, and the cow catcher. Glue the ½" pivot dowel into the chassis and let the glue dry. Then add the cow catcher (no glue), and glue on the ¼" plywood "nut". (This "nut" is cut the same way as the chimney top.) Be careful here, make sure the cow catcher is free to pivot.

The crowning touch is the lamp in the front. Drill a ¼" hole about 1/8" deep in the end of a ½" dowel. Then cut off a ¼"-thick slice for the lamp.

I filled all voids in the plywood with wood putty, and finished the train with two coats of *Hope's Tung Oil.*

The wheels turn, the cow catcher pivots, but there is one problem. I can't get it to run on time. Oh well . . .

MATERIALS LIST

A	Train chassis	½ x 3¼ - 10
B	Train chassis	½ x 3¼ - 10
C	Cow Catcher	1 x 3¼ - 4½
D	Door Frame	½ x ½ - 3
E	Cab side	½ x 2½ - 3
F	Cab Front	½ x 3¼ - 3
G	Boiler (9 pcs.)	½ x 2½
H	Back Wheels	½ x 2½
I	Back Hub	¼ x 1½
J	Front Wheel	½ x 1½
K	Front Hub	¼ x ½
L	Roof	¼ x 3¼ - 5¼
M	Pivot "Nut"	¼ x 1
N	Pivot Dowel	¼ x 1¾
P	Stack Top	½ x 1
Q	Smoke Stacks	½ x 1
R	Rear Axle	¼ x 1¼
S	Front Axle	¼ x 1
T	Boiler Rod	¼ x 5
U	Lamp	½ x ¼

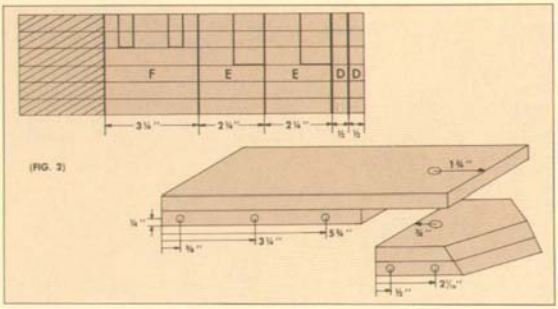

(FIG. 2)

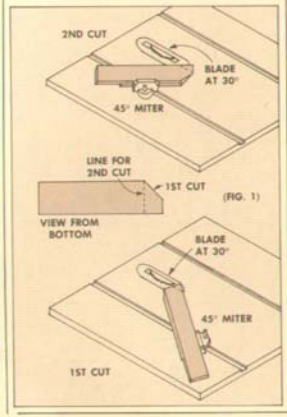

(FIG. 1)

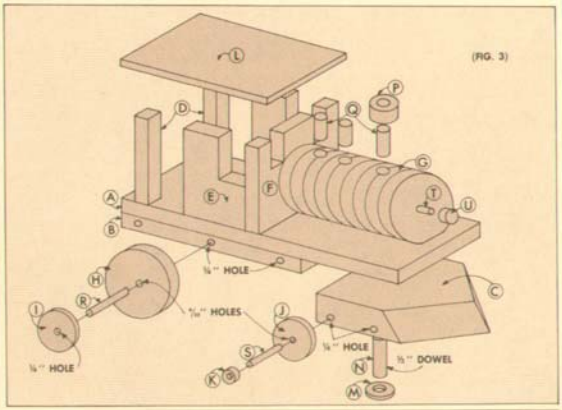

(FIG. 3)

Race Car

PLYWOOD PLUS ONE EVENING EQUALS VAROOM

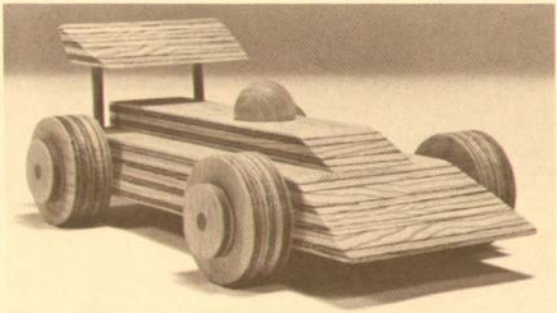

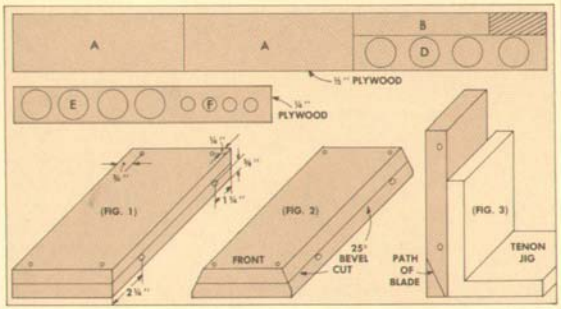

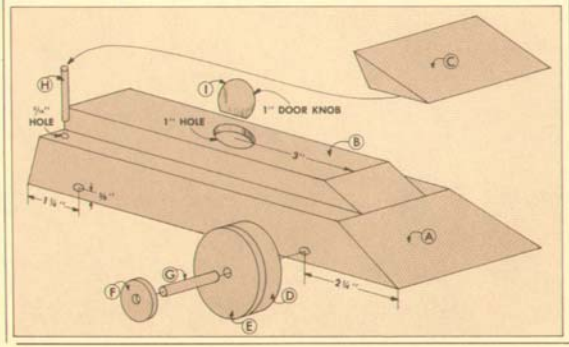

Everyone who picks up this race car, whether he's 5 years old or 55 years young, can't help but say, "Varoom". It's worth building it just to hear that reaction.

The sequence of cutting the wood and drilling the holes may sound a little strange, but it seems to work out the best. Start by cutting two pieces of ½" plywood 3½" x 9" (A). Glue and clamp these two pieces together and let dry.

While they're drying you can work on the wheels. The wheels shown on the car are 3/4" thick. I made them by cutting circles from ½" and ¼" plywood and gluing the two together. Use a hole saw with an outside diameter of 2" to cut the four circles. (Stop 1/16" short of going all the way through, then flip the wood over and finish the cut.) Drill the center hole out to 9/32" so it will turn freely on the ¼" axle dowel.

The wheel hubs (E) are cut from ¼" plywood with a 1" outside diameter hole saw. The center hole should be ¼". Glue the ¼" x 1½" axle dowels (F) into the hubs. When the glue is dry, sand the dowel flush with the outside of the hub.

Now back to the body. The first step is to drill the holes. Drill ¼" holes for the axles as shown in Fig. 1. Then drill 3/16" holes in the top at *both* ends for the spoiler struts. The holes in the front should be very shallow, 3/16" maximum.

Next, rip the sides at a 25° bevel as shown in Fig. 2. I started this cut ¼" from the bottom to leave a flat surface for the wheels.

Finally, use a tenon jig to cut off the front at 25°, starting 1/8" from the bottom to "blunt" the nose (Fig. 3). This cut does two things: it angles the front, and the waste becomes the spoiler (C). Also cut the front of the cockpit (B) at 25°.

Glue the cockpit (B) to the body, and glue the spoiler struts to the spoiler and body. Finally, drill a 1" hole, ¼" deep and glue a 1" round door knob in place.

I sanded all edges and corners smooth and finished with two coats of *Hope's Tung Oil.*

MATERIALS LIST

A	Body	1 x 3½ - 9
B	Cockpit	½ x 1½ - 7⅛
C	Air Spoiler	¾ x 1⅝ - 3½
D	Wheels	¾ x 2
E	Wheels	¼ x 2
F	Hubs	¼ x 1
G	Axle (dowel)	¼ x 1½
H	Spoiler Strut	5/16 x 1¾
I	Driver	1" door knob